Vanagon/TDI interface

As per HA-Projekt wiring harness, part # 79
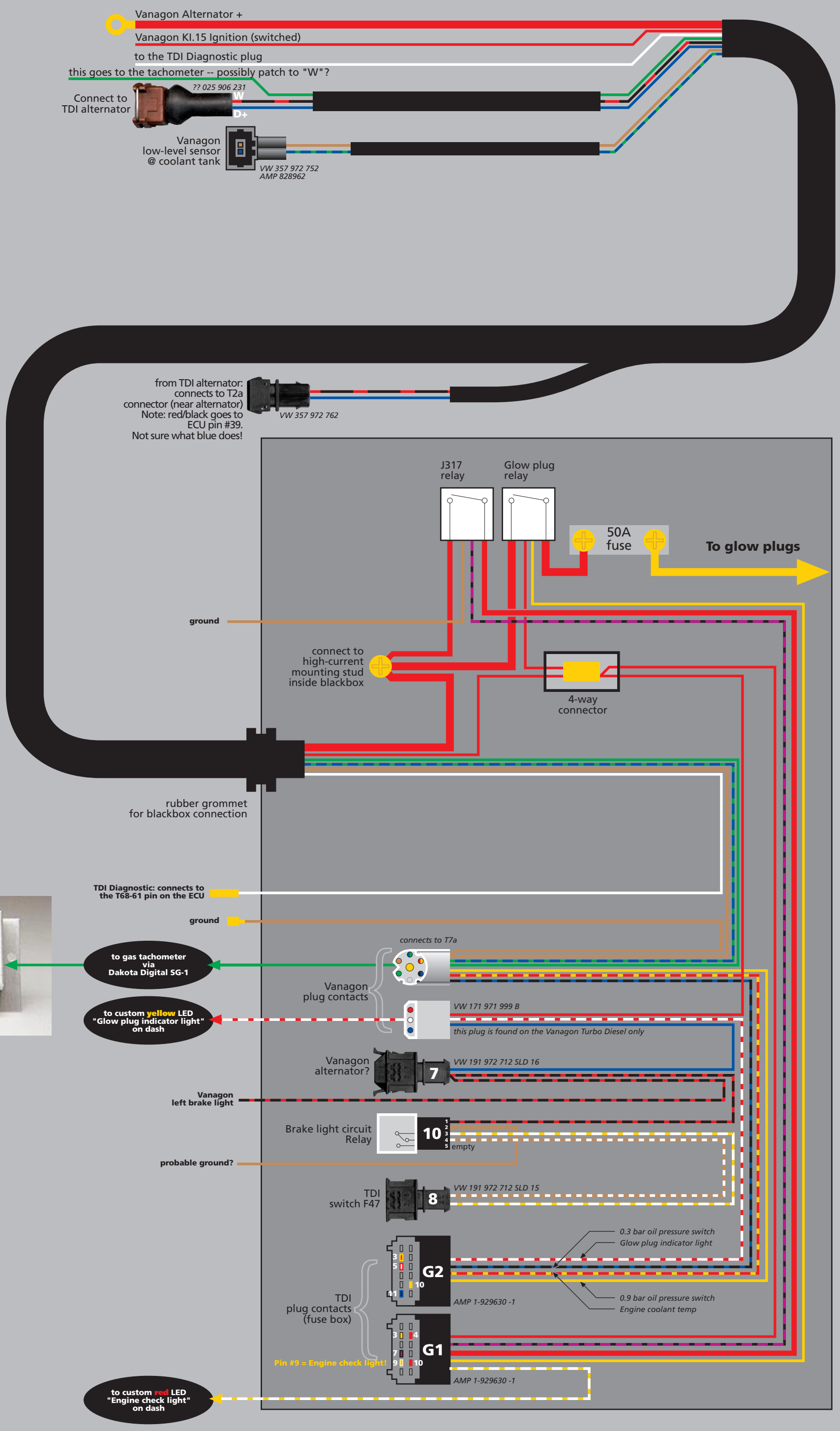
© 2000 Michael J. Sullivan